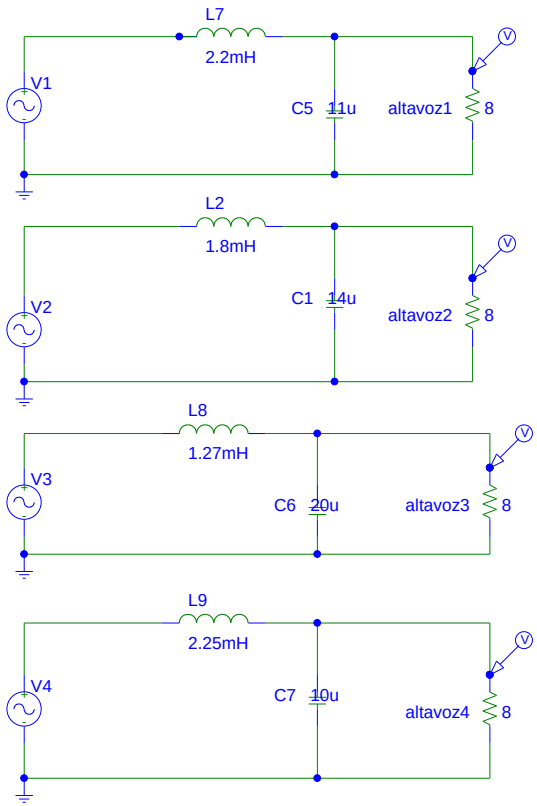

Page Size: A

Pablo Crespo de Pablos

Revision: -

Page 1 of 1

PDF created with FinePrint pdfFactory Pro trial version http://www.fineprint.com